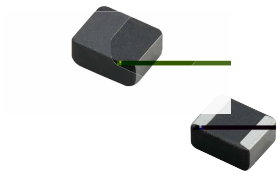
# MDE Series

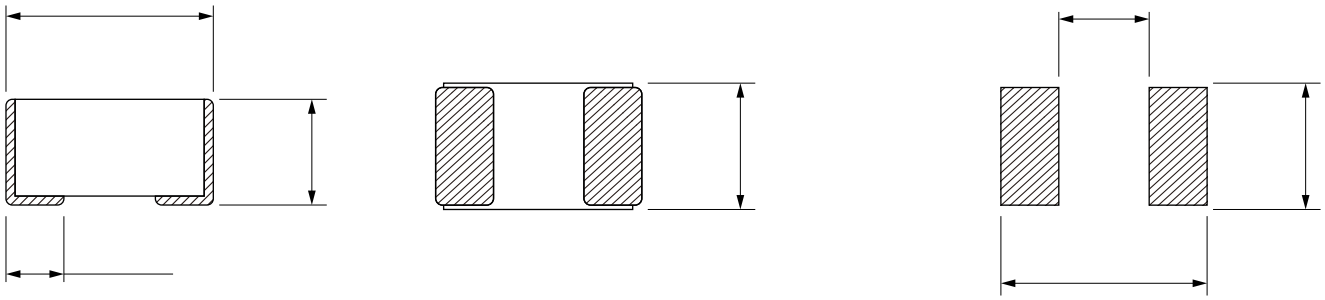


## FEATURES

- High satura on current realized by material proper es and structure design.
- Low DC resistance to achieve high conversion e ciency and lower temperature rising.
- Low Profile.
- Magne cally shielded structure to accomplish high resolu on in EMC protec on.
- Halogen free, Lead Free, RoHS Compliance.
- Opera ng temperature: -40 to +125 °C
- Quan ty: 3000PCS

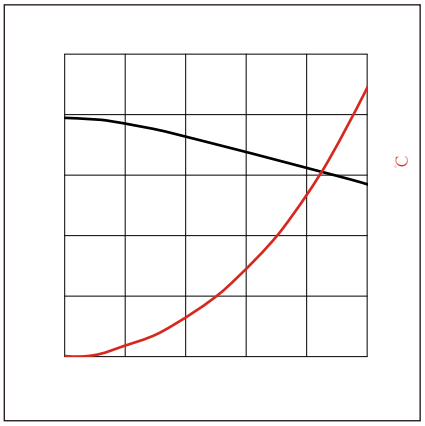
## APPLICATION

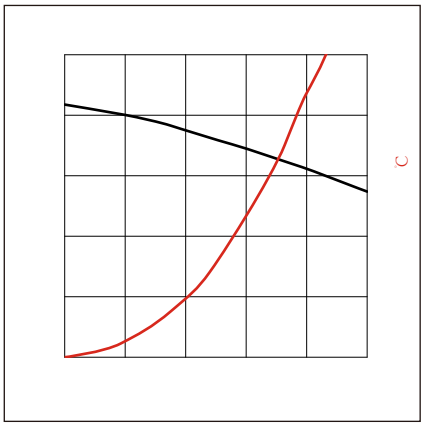
- Generic in portable DC to DC converter line.
- Smart phone, PAD
- DC/DC converter
- Thin-type power supply module.

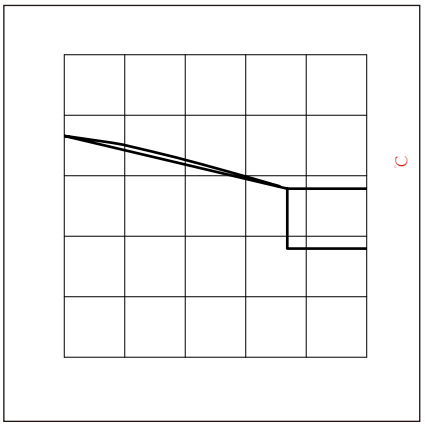


| Part No | Inductance @ 1MHz/1V (μH) | Tolerance | DC Resistance Typ. (mΩ) | DC Resistance Max. (mΩ) | Satura on Current Typ. (A) | Satura on Current Max. (A) | Temperature Rise Current Typ. (A) | Temperature Rise Current Max. (A) |
|---|---|---|---|---|---|---|---|---|
| MDE252012-R47M | 0.47 | ±20% | 21 | 25 | 5.3 | 4.95 | 4.60 | 4.18 |
| MDE252012-R68M | 0.68 | ±20% | 29 | 35 | 5.0 | 4.63 | 3.70 | 3.36 |
| MDE252012-1R0M | 1.00 | ±20% | 41 | 49 | 4.4 | 4.04 | 3.50 | 3.18 |
| MDE252012-1R5M | 1.50 | ±20% | 64 | 77 | 3.2 | 2.91 | 2.50 | 2.27 |
| MDE252012-2R2M | 2.20 | ±20% | 85 | 98 | 3.0 | 2.73 | 2.27 | 2.06 |
| MDE252012-4R7M | 4.70 | ±20% | 196 | 235 | 1.9 | 1.58 | 1.55 | 1.40 |

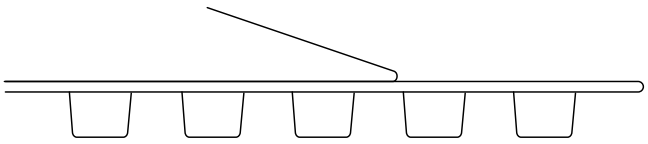
Temperature rising current will cause the coil temperature approximate ΔT40 °C
Satura on current will cause to drop approximately 30 %







:



:

